# 100-3368-GVR ( 100mm Fixed Castor Grey Rubber Wheel )

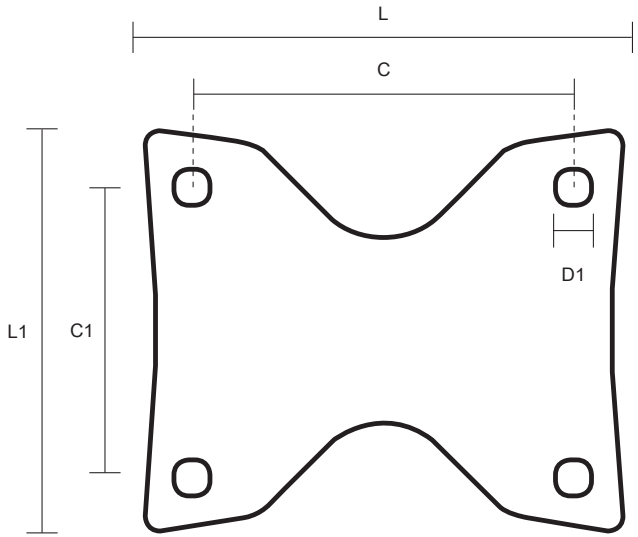


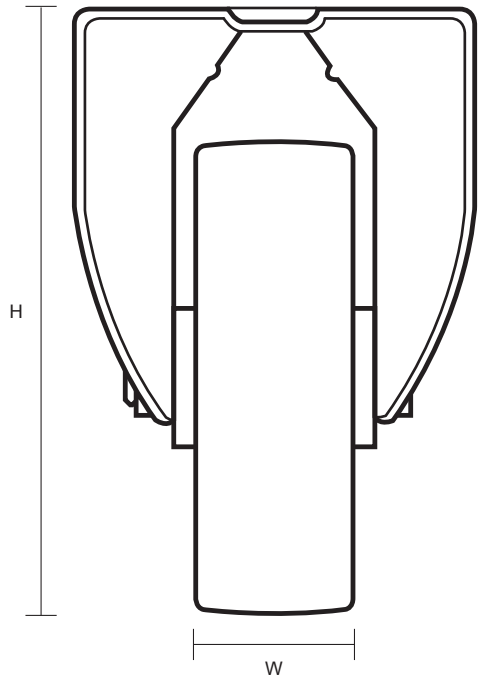


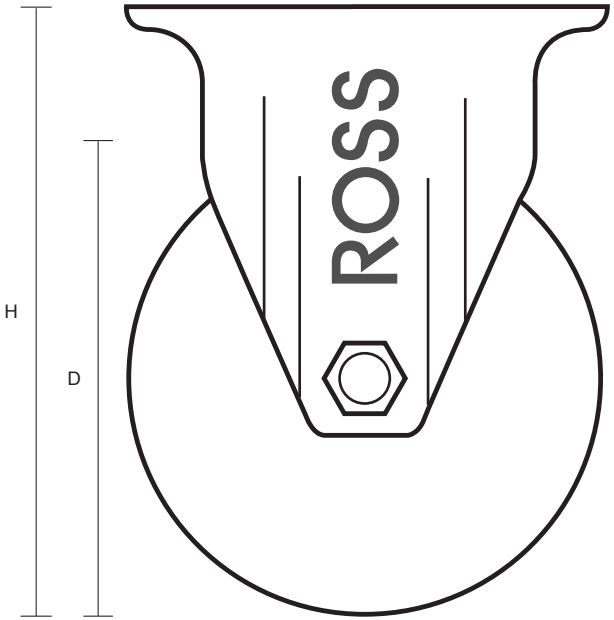


| Castor Dimensions - Key | | |
|---|---|---|
| D | Wheel Diameter (mm) | 100mm |
| L | Plate Dimension Length (mm) | 101mm |
| L1 | Plate Dimension Width (mm) | 85mm |
| C | Plate Hole Centers length (mm) | 80/77mm |
| C1 | Plate Hole Centers width (mm) | 60mm |
| D1 | Plate Hole Diameter (mm) | 8mm |
| H | Total Castor Height (mm) | 128mm |
| W | Tread Width (mm) | 23mm |
| R | Swivel Radius (mm) | n/a |
| | | |