125-3360-PVR/SWB (125mm Swivel Braked Castor Black Rubber Wheel)

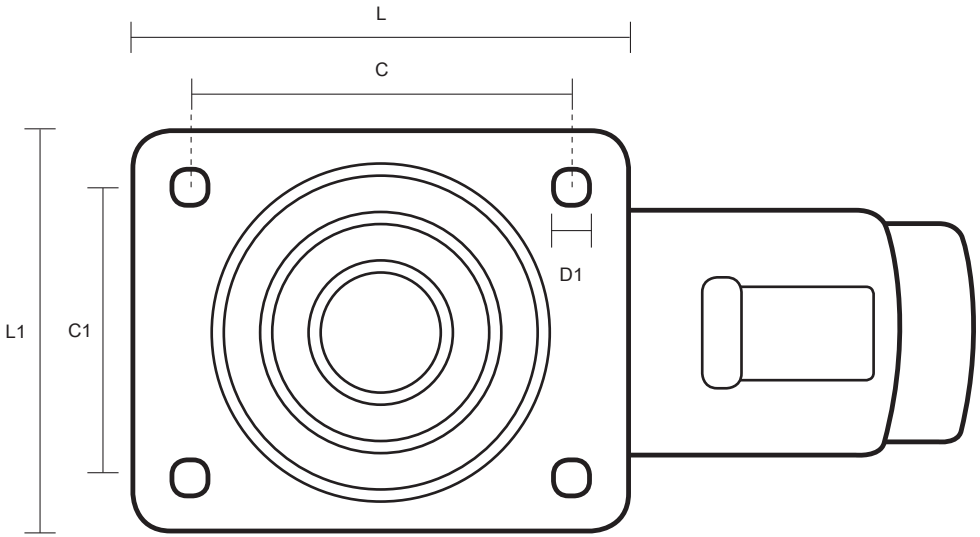

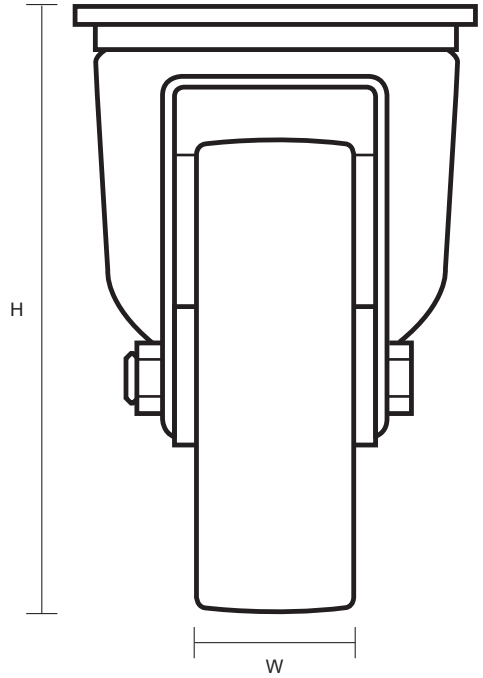

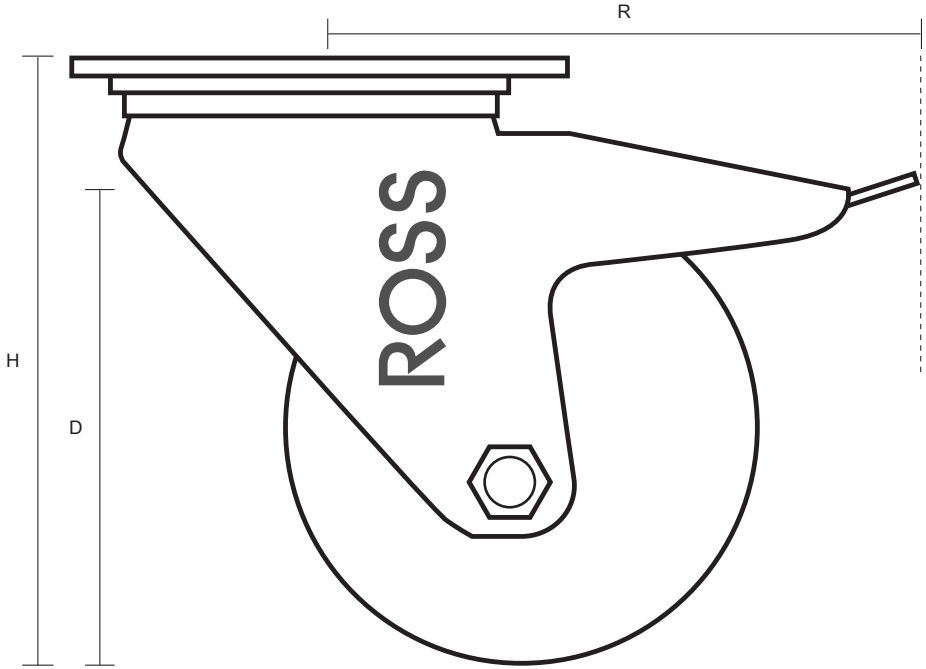

Castor Dimensions - Key		
D	Wheel Diameter (mm)	125mm
L	Plate Dimension Length (mm)	105mm
L1	Plate Dimension Width (mm)	85mm
C	Plate Hole Centers length (mm)	80/77mm
C1	Plate Hole Centers width (mm)	60mm
D1	Plate Hole Diameter (mm)	8mm
H	Total Castor Height (mm)	155mm
W	Tread Width (mm)	23mm
R	Swivel Radius (mm)	123mm